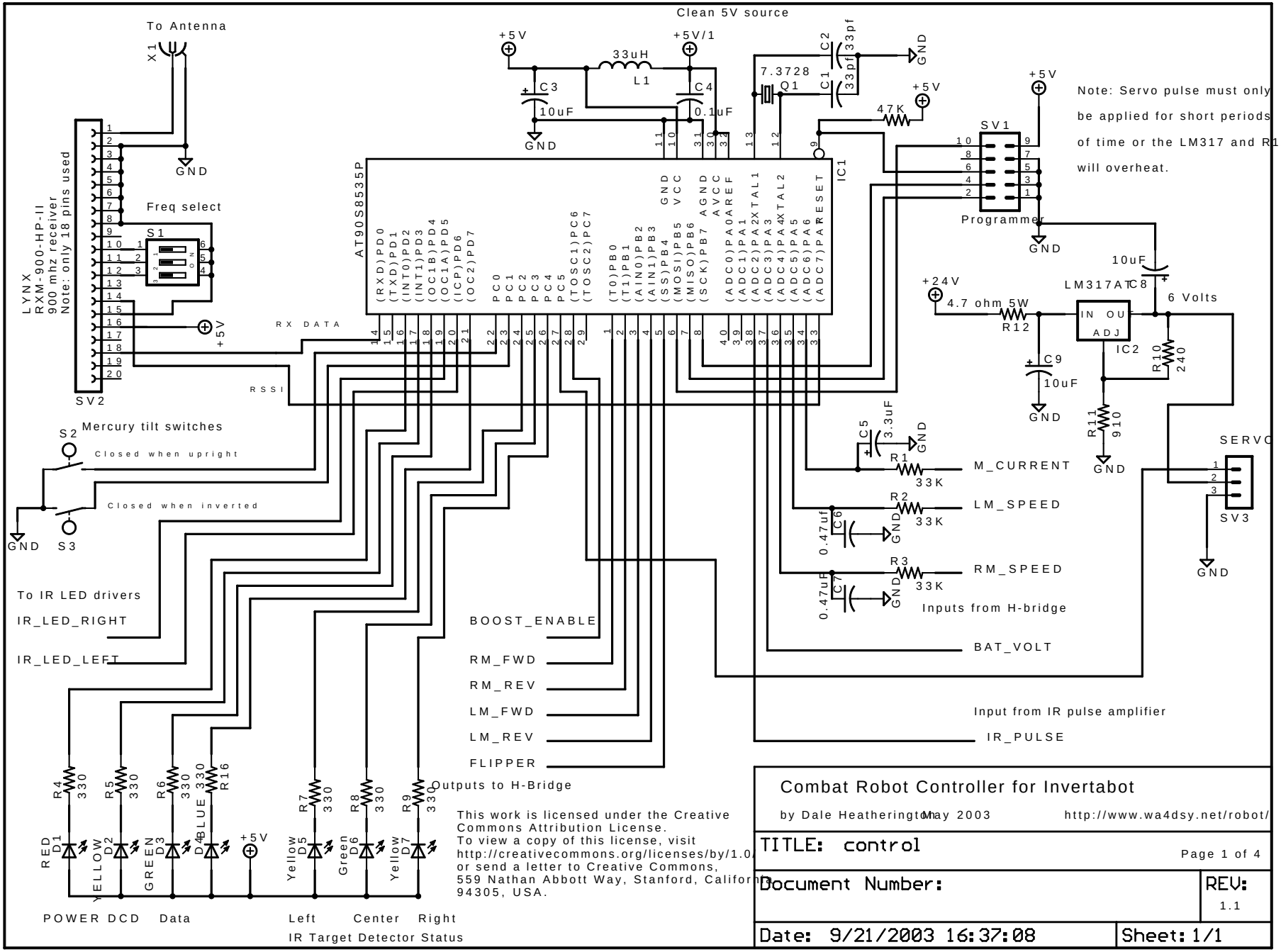
Clean 5V source
To Antenna
X1
GND
+5V
+5V/1
33uH
L1
C3
10uF
C4
0.1uF
7.3728
Q1
C1
33pf
C2
33pf
47K
SV1
Programmer
Note: Servo pulse must only be applied for short periods of time or the LM317 and R12 will overheat.
LYNX
RXM-900-HP-II
900 mhz receiver
Note: only 18 pins used
SV2
Freq select
S1
AT90S8535P
IC1
RX DATA
RSSI
+24V
4.7 ohm 5W
R12
LM317AT
IC2
IN OU
ADJ
C8
10uF
6 Volts
C9
10uF
R10
240
R11
910
SERVO
SV3
Mercury tilt switches
S2
Closed when upright
Closed when inverted
S3
C5
3.3uF
R1
33K
M_CURRENT
R2
33K
LM_SPEED
C6
0.47uf
R3
33K
RM_SPEED
C7
0.47uF
Inputs from H-bridge
BAT_VOLT
To IR LED drivers
IR_LED_RIGHT
IR_LED_LEFT
BOOST_ENABLE
RM_FWD
RM_REV
LM_FWD
LM_REV
FLIPPER
Input from IR pulse amplifier
IR_PULSE
Outputs to H-Bridge
R4 330
R5 330
R6 330
R16 330
R7 330
R8 330
R9 330
RED D1
YELLOW D2
GREEN D3
BLUE D4
Yellow D5
Green D6
Yellow D7
POWER DCD
Data
Left
Center
Right
IR Target Detector Status
This work is licensed under the Creative Commons Attribution License.
To view a copy of this license, visit http://creativecommons.org/licenses/by/1.0/
or send a letter to Creative Commons, 559 Nathan Abbott Way, Stanford, California 94305, USA.
Combat Robot Controller for Invertabot
by Dale Heatherington May 2003
http://www.wa4dsy.net/robot/
TITLE: control
Page 1 of 4
Document Number:
REV: 1.1
Date: 9/21/2003 16:37:08
Sheet: 1/1