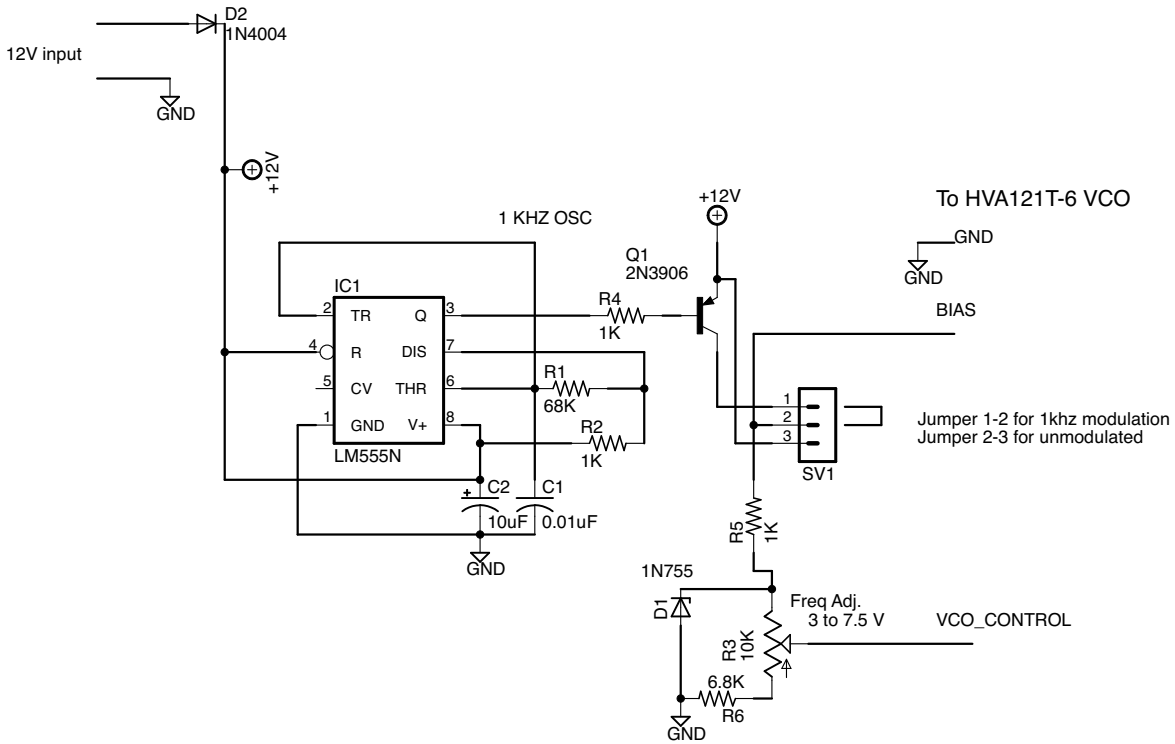


| | |
|---|---|
| TITLE: 10GHZ-Beacon Rev B 6 Mar 2011 | |
| Document Number: | REV: B |
| Date: 3/6/11 2:38 PM | Sheet: 1/1 |