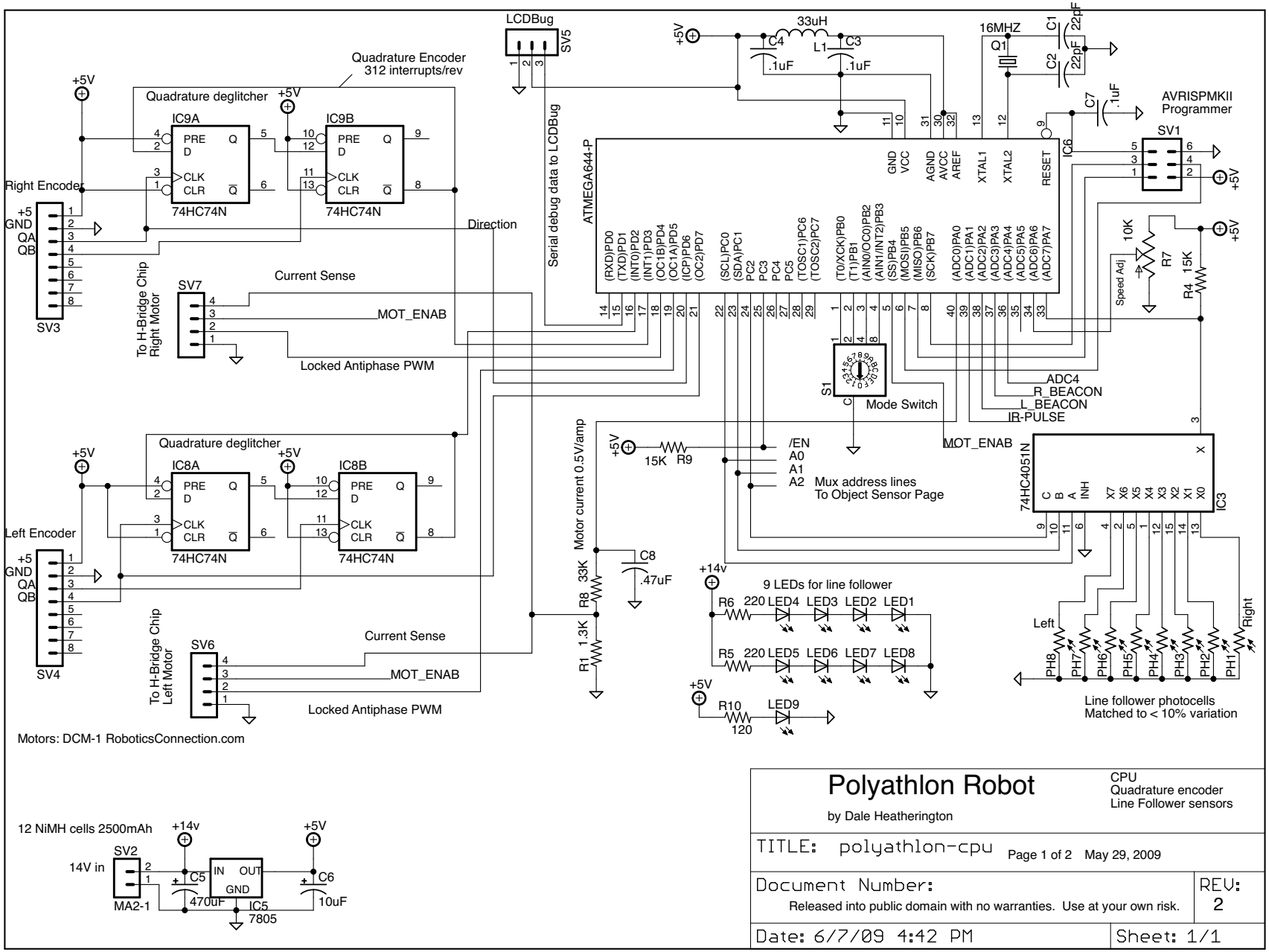

6/9/09 4:25 PM f=0.90 /Users/dale/Projects/RobotProjects/Polyathlon/sch/polyathlon-cpu.sch (Sheet: 1/1)